HW | Load Shackle

Product Description

The HW Load Shackle is specifically designed for demanding applications such as ship and port cranes. Made from high-strength alloy steel, the HW Load Shackle can also be manufactured from 17-4PH grade stainless steel upon request.

The HW Load Shackle is available in a capacity range from 3 tons to 1000 tons. Additionally, it can communicate with a wireless handheld terminal up to 200 meters away. It can display weight data from up to 16 different load pins, both individually and collectively.

Application Areas

- Strain Tests
- Tensile Tests
- Force Tests
- Mining Transportation
- Logistics
- Shipyards
- Construction
- Ports

Technical Specifications

HW

LOAD CELL TECHNICAL DETAILS

Total Error	**±0.5 %FS**	**Operating Temperature Range**	**-30 ~ +70 °C**
Output Gain (FS)	1.2 ± 0.2mV/V	**Recommended Excitation Voltage**	10 VDC
Zero Balance	± 1 %FS	**Maximum Excitation Voltage (Umax)**	15 VDC
Input Resistance	380 Ω ± 20 Ω 720 Ω ± 20 Ω	**Overload Capacity**	150 %FS
Output Resistance	350 Ω ± 5 Ω 702 Ω ± 5 Ω	**Breaking Load**	300 %FS
Isolation Resistance	≤ 5000 MΩ (100VDC)	**Protection Class (EN60529)**	IP 66
Compensated Operating Temperature	-10 ~ +40 °C	**Load Cell Material**	Alloy steel Stainless steel

HY185 WIRELESS INDICATOR TECHNICAL DETAILS

Screen	LCD	**Wireless Range**	200 M.
Radio Frequency	430-470MHz	**Battery Power Supply**	AAA 1.5V * 4
Stability Time for Reading	≤5 sec	**Operating Temperature**	-10°C ~ 45°C, 95%RH
Accuracy Class	OIML III	**Communication**	Rs232
Communication	Wireless interface, 430MHZ–470MHZ		

Technical Dimensions and Drawings
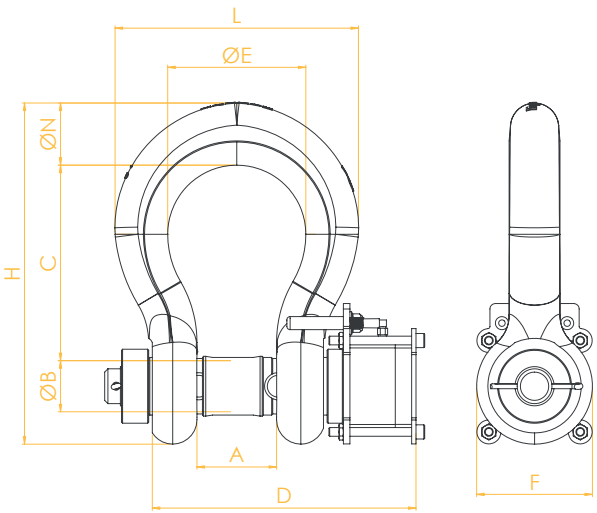
Capacity	A	ØB	C	ØD	ØE	ØF	H	L	ØN	Weight	Div. Kg
3 Ton	36,5	25	76	22,4	55	50	148	102	22,4	2	1
6 Ton	36,5	25	76	22,4	55	50	148	102	22,4	2	2
12 Ton	51,5	35	108	33	78	70	210	146	33	6	5
17 Ton	60	42	139	41	94	84	254	175	41	10	10
25 Ton	74	51	168	48	119	100	313	225	48	17	10
35 Ton	83	60	202	54	146	122	348	253	54	23	20
55 Ton	105	70	267	70	185	150	453	327	70	47	20
80 Ton	130	90	330	80	200	170	546	365	80	80	50
120 Ton	140	110	360	95	230	210	626	419	95	135	100
150 Ton	150	125	380	108	260	240	653	468	108	165	10